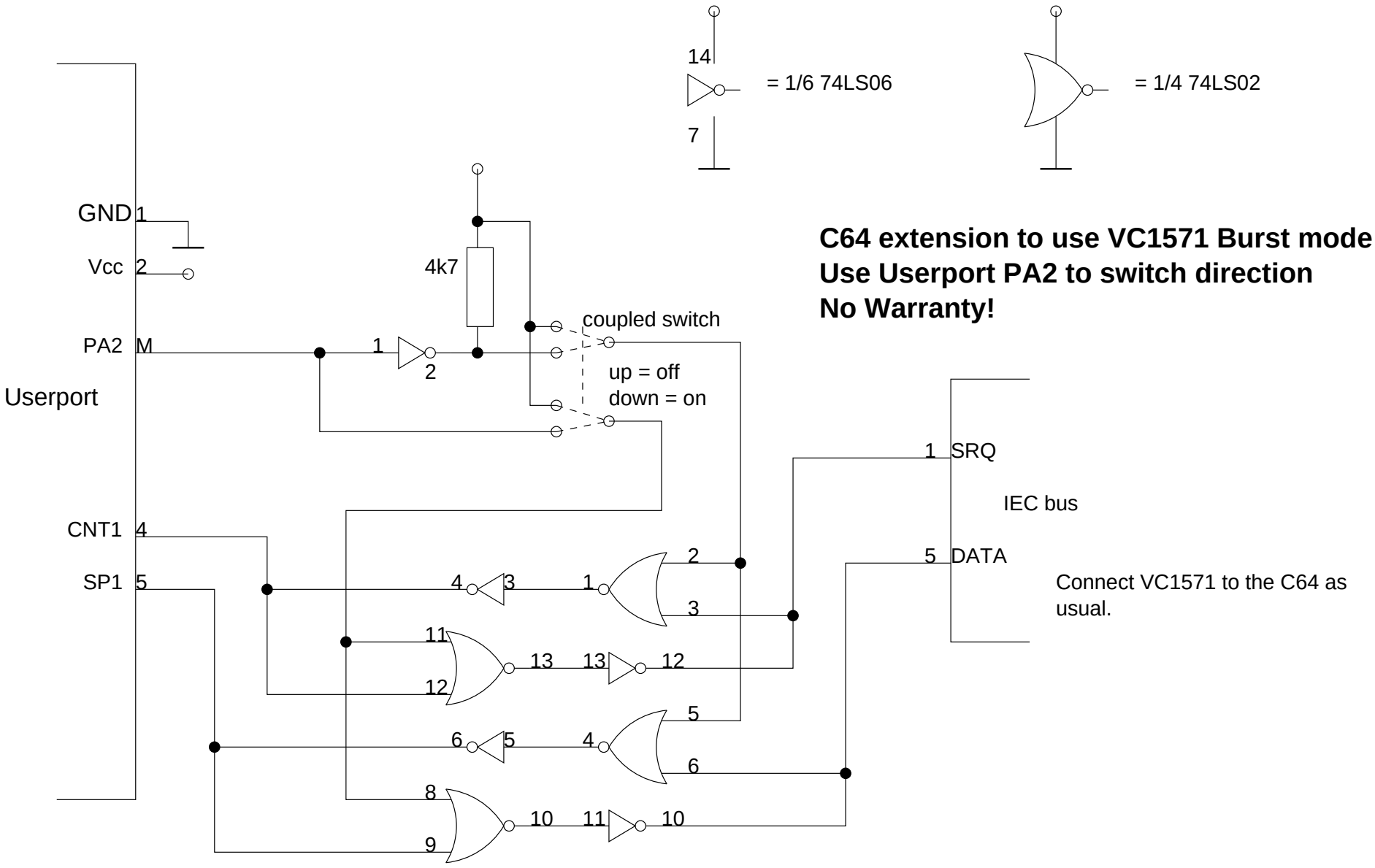
14
7
= 1/6 74LS06
= 1/4 74LS02
C64 extension to use VC1571 Burst mode
Use Userport PA2 to switch direction
No Warranty!
GND 1
Vcc 2
PA2 M
Userport
CNT1 4
SP1 5
4k7
coupled switch
up = off
down = on
1 SRQ
IEC bus
5 DATA
Connect VC1571 to the C64 as usual.